Proc. 5th Int. Mobility Conf. on Emerging Automotive Technologies: Global & Indian Perspective, India Habitat Center, Jan. 9-11, 2008, pp. 358-364.

2008-28-0051

Sensor-Actuator Based Smart Yoke for a Rack and Pinion Steering System

T. G. Rao, S.K. Saha[+], I.N. Kar*

Department of Mechanical Engineering

Indian Institute of Technology Delhi

Hauz Khas, New Delhi, 110016

E-mail: gopi509161@yahoo.com,

saha@mech.iitd.ernet.in,

ink@ee.iitd.ernet.in

*Department of Electrical Engineering

[+]Communicating author

ABSTRACT

The controlling behaviour of a vehicle is influenced by the performance of its steering system. The steering system consists of steering wheel, steering column, rack and pinion, steering gearbox, and a linkage system. The vehicle is controlled by the behaviour of the steering gear with the spring loaded rack and pinion. This spring loading arrangement consists of yoke nut, spring, and plunger. The plunger is always in contact with the rack, by the spring and yoke nut. The spring loading arrangement helps to eliminate the backlash between the rack and pinion, but increases the preload on the gear. This increases the torque required to rotate the steering wheel by the driver. In order to reduce this torque requirement, the spring loading can be reduced which in turn will increase the noise when the vehicle running on a bumpy road, and also may turn undesirably due to road disturbances. Hence, contradictory requirements to be fulfilled in the steering gear. This is done by providing an allowable preload on the spring. In practice, however, it will be desirable that the steering system is stiff while going on a straight road, and less stiff while turning at low speeds. This is accomplished by a Sensor-Actuator Based Smart Yoke for the rack and pinion steering system. In this arrangement, the sensor will sense the rack position. This sensor used here is a linear variable differential transformer (LVDT). The sensor signal is captured by LabView software, and according to the sensor data, the software calculates a signal for the DC servo motor, that rotates the plunger causing the change in spring loading. The LabView signal is calculated based on an empirical formula obtained from a real torque data required in the rack and pinion steering system.

Key words: Sensor-actuator, Smart Yoke, LVDT, LabView

INTRODUCTION

The rack-and-pinion steering system converts the rotational motion of the steering wheel into the linear motion needed to turn the wheels, and provides a gear reduction, making it easier to turn the wheels. On most cars, it takes three to four complete revolutions of the steering wheel to make the wheels turn from lock to lock (from far left to far right) as shown in Figure 1. Turning of wheels depends on the steering ratio. It is the ratio between the angle turned by the steering wheel and the angle turned by the road wheel. A higher ratio means that one has to turn the steering wheel more to get the wheels to turn a given distance, and vice versa. A rack and pinion assembly must satisfy specific requirements, such as backlash elimination, etc. The steering system is also subjected to continuous vibrations. So, any backlash will lead to noise. Apart from gear errors, backlash comes from the fact that the central portion of rack teeth span and the corresponding mating pinion teeth are more prone to wear. Thus, backlash elimination becomes inevitable in steering systems. To accommodate the steering linkages, along with the gearbox within the track width of the vehicle, rack travel is limited. This low rack gain with high reduction gear ratio puts a limitation on pinion diameter. For a small diameter pinion, sufficient tooth strength is achieved by reducing the number of teeth. This introduces undercutting. Undercutting is avoided by resorting to a pinion profile shift [1]. The profile-shifted pinion has increased tooth width than the tooth space. The rack and pinion in the RPS is assembled under a preload force. The nominal torque value required to rotate the pinion depends upon this preload. The preload is so adjusted that the steering is not too responsive during the straight-ahead motions and not too stiff during turning.

The components of a Rack and Pinion Steering (RPS) gear-box are shown in Figure 2. The rack and pinion have different helix angles as well as opposite hand of

helix. The axes of the rack and pinion are non-parallel, non-intersecting. The pinion is installed at an angle equal to the difference between the helix angles of the rack and pinion.

A spring-loaded plunger supports the rack. The spring preload is introduced to eliminate the backlash and impart sufficient stiffness to the steering system.

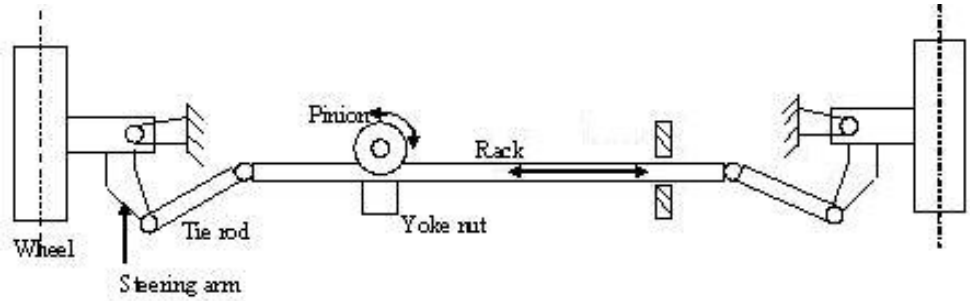

Figure 1 Rack and pinion steering system

The preload can be adjusted by tightening the yoke nut, as shown in Figure 2. The torque required to steer the road wheels of a vehicle is maximum when the vehicle is stationary. Normally, the steering behaviour of any vehicle such that it should be very stiff while going on a straight road and less stiff while taking a turn or parking.

In this paper a sensor-actuator based smart yoke has been proposed and implemented successfully. In this arrangement, the sensor will sense the rack position. This sensor used here is a linear variable differential transformer (LVDT). The sensor signal is captured by the LabView software, and according to the sensor data, the software calculates a signal for the DC servo motor that rotates the plunger causing the change in spring loading. The LabView signal is calculated based on an empirical formula obtained from a real torque data acquired experimentally.

EMPIRICAL MODELING

Free Pinion Torque (FPT) is the torque required to rotate the steering wheel without having any road wheels. This is an indirect measure of the actual torque required to rotate the road wheels.

In a rack and pinion steering system, the FPT is experimentally obtained using an arrangement shown in Figure 3 (a). The corresponding plot is shown in Figure 3 (b). in this section an empirical model for the FPT is proposed, to predict the FPT characteristics, which can be used as a plant model for the control of proposed smart yoke. Note that the FPT depends on the following factors [1]:

1. Friction between the rack and the pinion meshing
2. Friction between the rack and the bush
3. Friction between the rack and the plunger
4. Rack bend error
5. Pitch Circle Diameter (PCD) run out error

Also the following observations are made from the plot shown in Figure 3 (b).

1. The FPT is periodic in nature. Thus, a sine function can be chosen to estimate its behaviour.
2. It has two visible frequencies of periodicity.

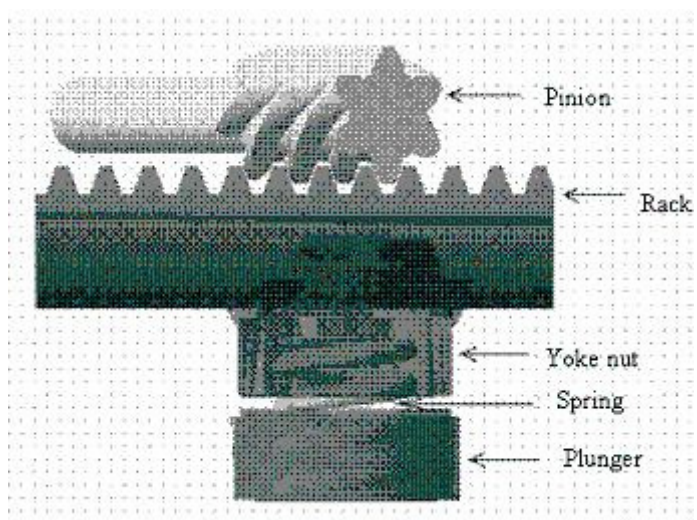

Figure 2 Components of rack and pinion steering gear-box [1]

Based on the factors and observations mentioned above, several FPT formulas are proposed, since the pinion has six teeth, every rotation of the pinion will used to six peaks and toughs. Hence, one can choose FPT as

$$\mathbf{FPT = H^* \sin(6^*\theta)} \quad \ldots(1)$$

where H is teeth factor, θ is pinion rotation. Also, for every rotation, there is a global peak and tough. This pattern is due to the PCD runout error, and the same tooth coming into mesh after every rotation. Thus, another function could be

$$\mathbf{FPT = L^* \sin(\theta)} \quad \ldots(2)$$

where L is the PCD Runout factor. On closer look at the plot it can also be seen that the mean value of the torque is decreasing in the forward direction and increasing in the reverse direction.

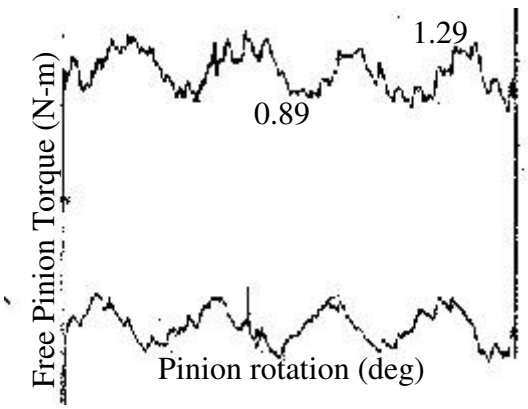

(b) Free pinion torque characteristics

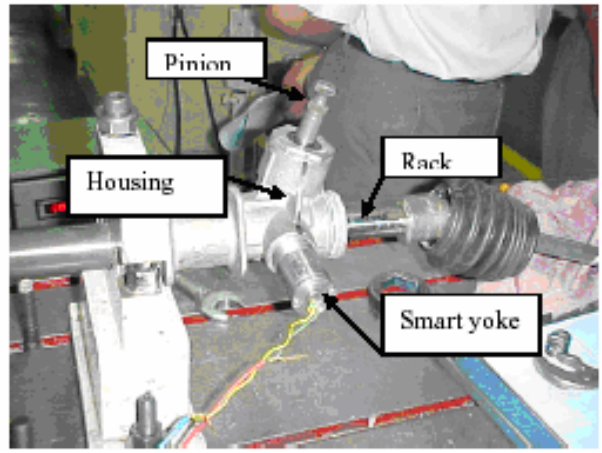

(a) Setup for FPT

Figure 3 Experimental FPT

This pattern can be attributed to the rack-bend error (y), and the FPT can be estimated as

FPT= R*y … (3)

where R is the rack bend error factor where as the rack bend error, y, is given by [1]

$$y = 2e^{-15}x^6 - 3e^{-12}x^5 + 2e^{-9}x^4 - 6e^{-7}x^3 + 9e^{-5}x^2 - .006x - .1188 \quad \ldots(4)$$

Neglecting the third and the higher order terms to avoid underflow equation (4) yields,

$$y = (9e^{-5})x^2 - .006x - .1188 \quad \ldots (5)$$

Next the comparison of plots due to plunger preloads i.e., at different yoke nut tightening, shows that as the plunger load is increased the FPT is also increased. Hence, the following FPT function is proposed

FPT ∝ P …(6)

where P is the plunger load factor. Due to the friction between the rack and the plunger, the FPT is given by

FPT ∝ (μ_1+μ_2)*P +μ_2F$_1$ … (7)

where F_1 is the rack weight on the plunger. Now the friction between the rack and the bush in the form

FPT= μ_3*F$_2$ …(8)

where F_2 is the rack weight on the bush. In order to capture the effect of other undefined factors which are prominent in the FPT plot, figure 3(b), Fast Fourier Transform (FFT) analysis [2] of the experimental data was done. From the FFT analysis figure 4, the frequency component of the signal was found. Harmonic analysis of the experimental data was done. In this analysis, only the first and sixth terms are considered, as the two frequencies are prominent in the FFT plot, Figure 4. Using the harmonic analysis, the coefficients of first and sixth terms are found as follows.

If y=f(x), the Fourier series is given by

$$f(x) = \frac{a_0}{2} + \sum_{n=1}^{\infty} [a_n \cos(nx) + b_n \sin(nx)] \quad \ldots(9)$$

where

$$a_0 = \frac{1}{\pi}\int_0^{2\pi} f(x)dx \; ; \qquad a_n = \frac{1}{\pi}\int_0^{2\pi} f(x)\cos(nx)\, dx \; ;$$

$$b_n = \frac{1}{\pi}\int_0^{2\pi} f(x)\sin(nx)\, dx$$

Since the mean value of the function, y=f (x), over the range (a, b), is $\frac{1}{b-a}\int_a^b f(x)dx$, Equation (9) is modified as

a_0 =2 [mean value of f (x) in (a, b)]
a_n =2 [mean value of f (x) cos(nx) in (a, b)]
b_n =2 [mean value of f (x) sin(nx) in (a, b)]

for the values of n=1 and 6, the overall expression for the FPT is given by

FPT=P+0.63*P+0.2*F$_1$*rp+F$_2$*0.43*rp+b-a$_1$*sin(θ)+a$_1$*cos(θ)+b$_6$*sin(6*θ)+a$_6$*cos(6*θ)+R*(9e-5.*(rp* θ).^2-0.006*rp*θ -0.1188) …(10)

The unknowns in the above equation are found from the method of least squares [3]. The results from the empirical formula, equation (10), are shown in Figure 5. The error (±8%) considerably low, namely ±0.25Nm, this equation is taken as the empirical model for the FPT that will used as the plant model for the implementation in Smart Yoke.

CONTROL SIMULATION

In the previous section, an empirical model is developed for the estimation of FPT. This empirical model can now be used to control its desired value. The equation for the FPT is shown in equation (10). A MATLAB program was developed for the control of the FPT characteristics. Since the FPT is a function of both the pinion rotation and the plunger movement, the difference between the desired and actual FPT is calculated. Accordingly, the movement of the yoke nut is obtained. It is pointed out here that the stiff and non-stiff behaviours would be obtained by tightening and loosening the yoke nut. In order to achieve constant 1.054Nm FPT, the

corresponding Yoke nut displacement is shown in Figures 6.

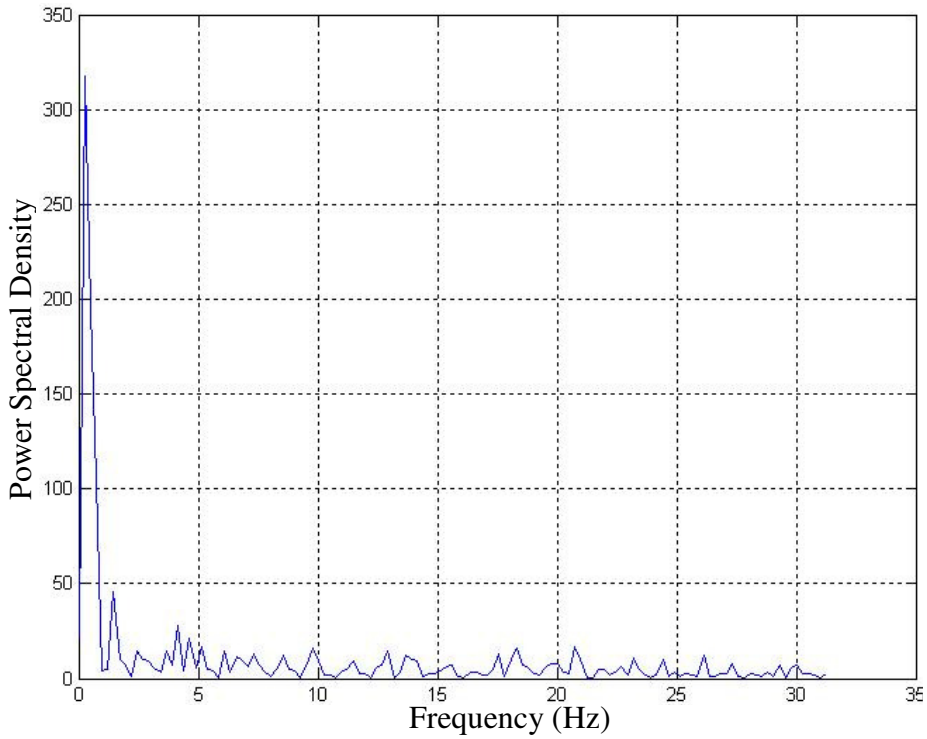

Figure 4 FFT analysis of FPT characteristics

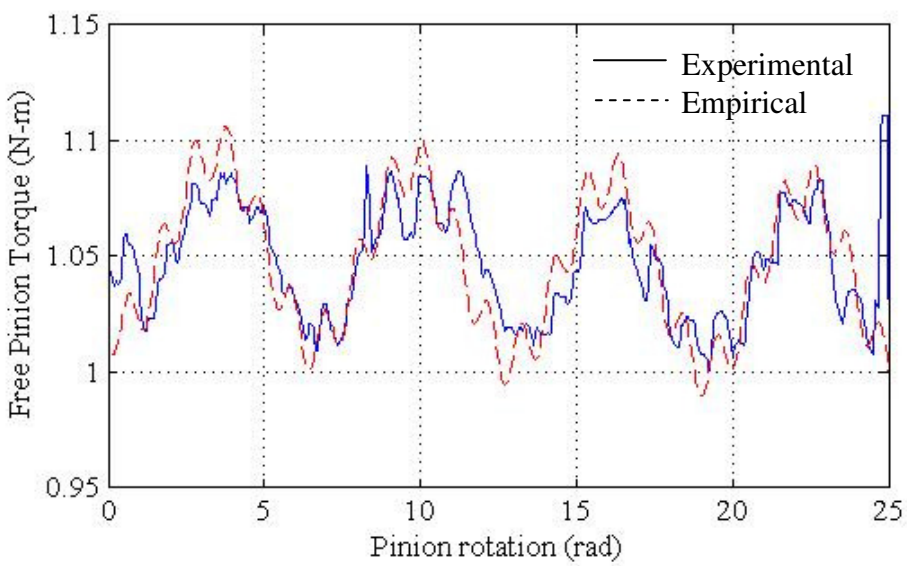

Figure 5 Empirical and Experimental plots

SENSOR-ACTUATOR BASED SMART YOKE

The above control of FPT can be implemented in the smart yoke of a real RPS, which consists of a. LVDT, b. ACTUATOR, c. LabView Interface, d. RPS Assembly. Each item is explained below.

a. LVDT

The Linear Variable Differential Transformer (LVDT) is the mostly used variable-inductance transducer. It is an electro-mechanical device designed to produce an AC voltage output proportional to the relative displacement of the transformer and the armature

b. Actuator

The actuator is a DC servo motor. This is a high quality drive component and is equipped with high performance permanent magnets.

c. LabView Interface

National Instruments LabView is a software tool for designing test, measurement, and control systems. LabView is used here for the control of FPT characteristics. The control algorithem is shown in Figure 7. In this control algorithm, the empirical equation (10) is used. Based on the reference desired FPT, the amount of rotation to be given to the actuator for the loosening or tightening of the yoke nut is calculated.

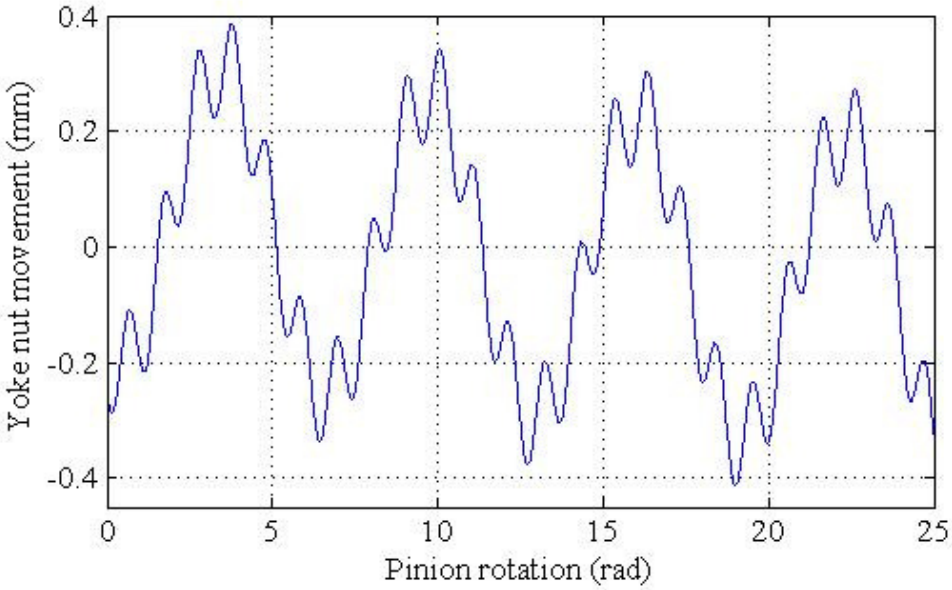

Figure 6 Yoke nut movement

With the help of data acquisition (DAQ) card, this signal is given to the actuator that rotates yoke nut. In practice, the steering system should be stiff while going on a straight road, and less stiff while turning at low speeds. This is programmed in the LabView, where the experimental setup is shown in the Figure 8. The yoke and actuator arrangement is shown in the Figure 9. In the Figures 8 and 9, the sensor (LVDT) is positioned to track the rack movement, which is controlled using Galil software. which is captured by LabView software through DAQ card. Based on the sensor signal the LabView calculates the control signal to be given to the motor, that drives the RPS assembly. The program is developed in such a way that, while taking a turn, the sensor senses the rack position around 2cm from the center. According to this signal, the LabView calculates the control signal based on how much the plunger will rotate, and the signal is given to the motor.

After taking a turn, the steering is in center position, and sensing this position, a control signal is given to motor in such a way that, the plunger rotates back and the steering is in normal position. The FPT for the normal condition, i.e., while going on a straight path is shown in Figure 10. While taking a turn, the control signal is given to the actuator, which rotates the plunger. The FPT obtained in this position is shown in Figure 11. From Figures 10, and 11, it can be easily identified that the FPT is reduced while taking a turn, which is required.

CONCLUSIONS

Sensor-actuator based smart yoke is proposed and implemented. In this arrangement, the sensor will sense the rack position. The sensor used here is a linear variable differential transformer (LVDT). The sensor signal is captured by the LabView software, and according to the sensor data, the software calculates a signal for the DC servo motor, that rotates the plunger causing the change in spring loading. The LabView signal is calculated based on an empirical formula obtained from a real torque data required in the rack and pinion steering system. For real implimentations, the LabView programming has to be coded in some hardware chips. Besides, the servo DC motor has to be added which will perform the abovementioned in addition to what a driver inputs through the steering wheel.

ACKNOWLEDGEMENT

Partial financial assistance from Sona Koyo Steering Systems Ltd., Gurgaon to IIT Delhi under the project entitled, “Investigation and Improvement of Manual Steering System through Mechatronics and Intelligence,” is acknowledged.

REFERENCES

1. Kamble N. and Saha S. K., 2005, “Effect of Pinion Profile Modification on Rack and Pinion Steering Gear,” 2005-01-1273, Proc. Steering and Suspensions, Tire and Wheels, SP 1915, pp. 83-90.
2. Nakra, B.C., 1998, Theory and Applications of Automatic Controls, New Age International (P) Limited, Publishers, New Delhi.
3. Gopalarao Thulugu, 2006, “Smart Yoke Implementation to the Manual Rack and Pinion Steering System” M.Tech Project Report, Mech. Engg. Dept., IIT Delhi.

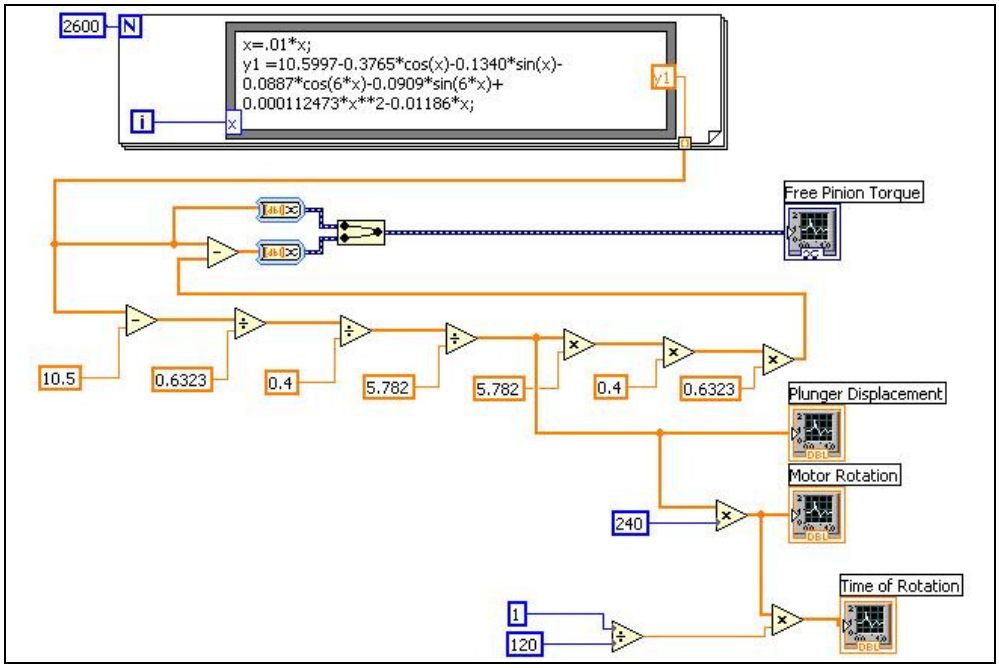

Figure 7 Control algorithm for FPT characteristics

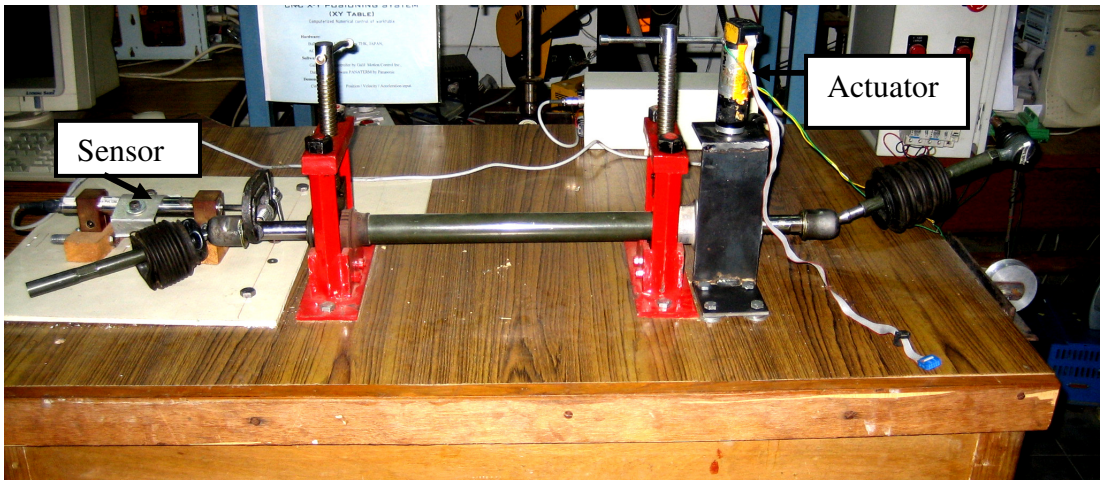

Figure 8 Experimental setup for sensor-actuated smart yoke

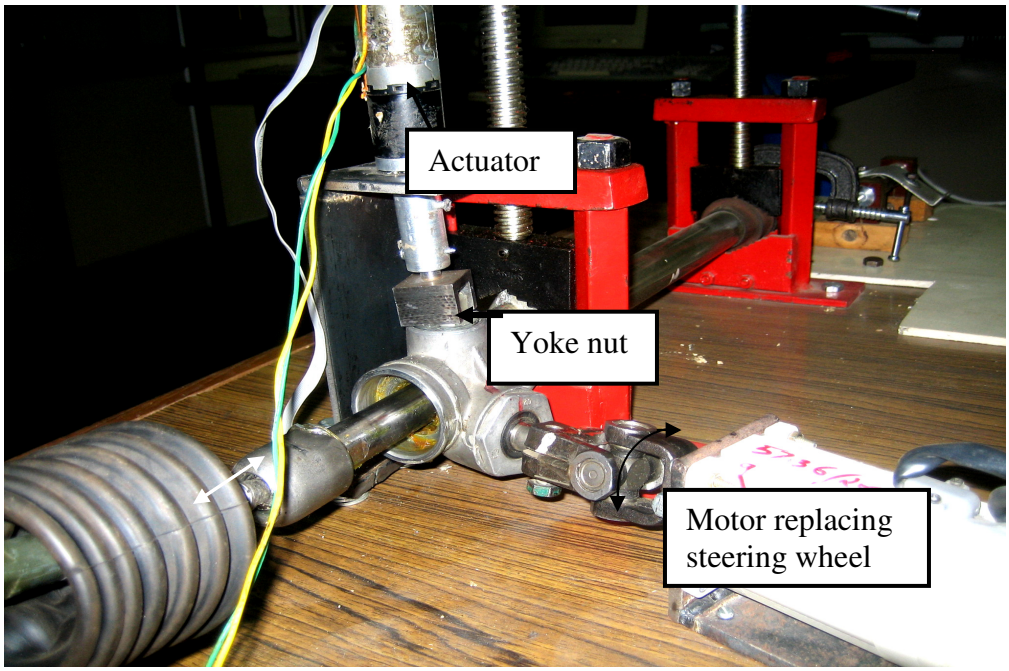

Figure 9 Yoke and actuator interface

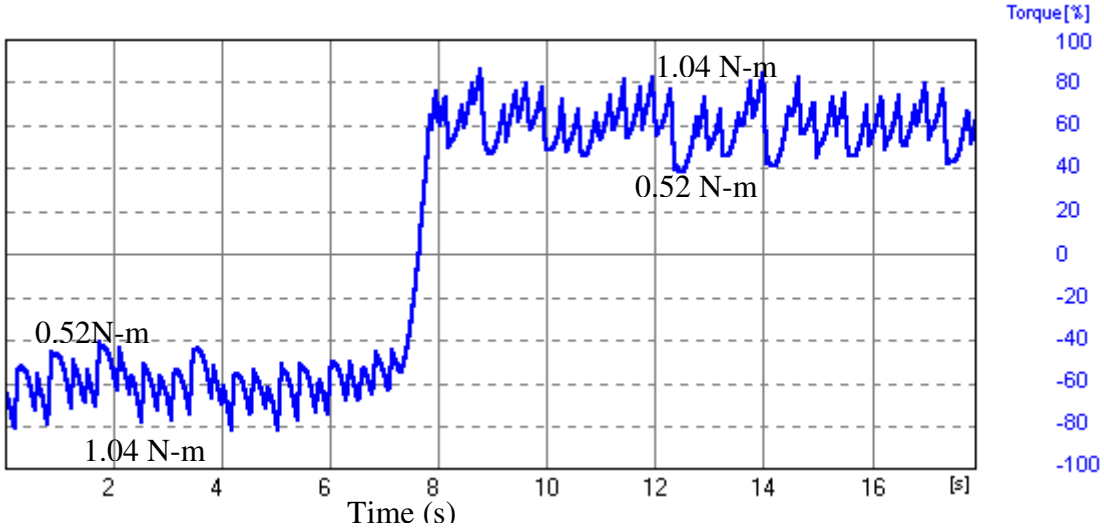

Figure 10 FPT for normal steering

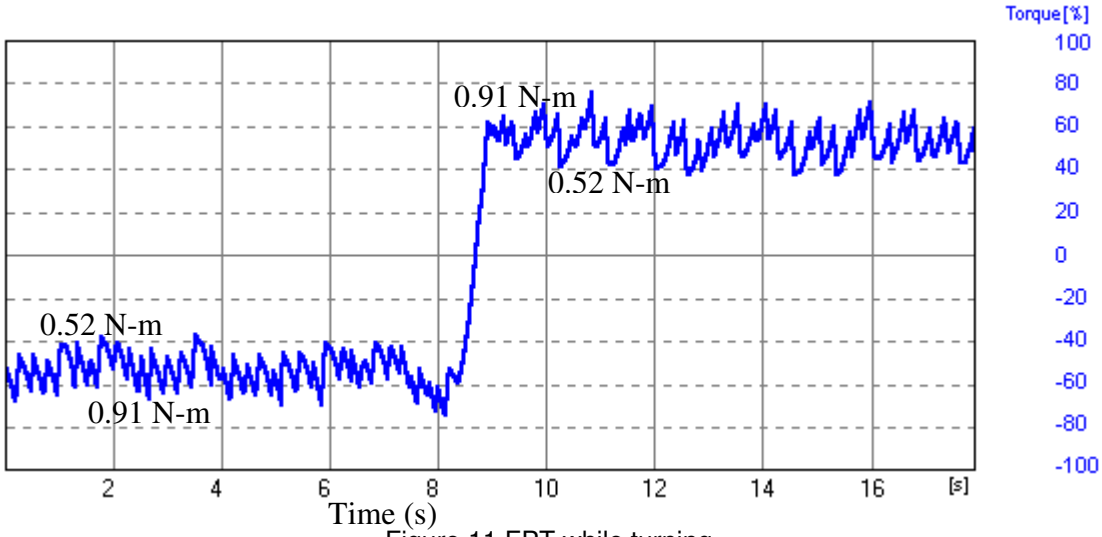

Figure 11 FPT while turning